The NASA Hyper-X Program

Delma C. Freeman, Jr.,[1] David E. Reubush,[2] Charles R. McClinton,[3] Vincent L. Rausch,[4] and J. Larry Crawford[5]

Abstract

This paper provides an overview of NASA's Hyper-X Program; a focused hypersonic technology effort designed to move hypersonic, airbreathing vehicle technology from the laboratory environment to the flight environment. This paper presents an overview of the flight test program, research objectives, approach, schedule and status. Substantial experimental database and concept validation have been completed. The program is currently concentrating on the first, Mach 7, vehicle development, verification and validation in preparation for wind-tunnel testing in 1998 and flight testing in 1999. Parallel to this effort the Mach 5 and 10 vehicle designs are being finalized. Detailed analytical and experimental evaluation of the Mach 7 vehicle at the flight conditions is nearing completion, and will provide a database for validation of design methods once flight test data are available.

Introduction

The development of reusable launch vehicles holds great promise as the key to unlocking the vast potential of space for business exploitation. Only when access to space is assured with a system which provides routine access with affordable cost will businesses be willing to take the risks and make the investments necessary to realize this great potential. The current NASA X-33 and X-34 Programs are steps on the way to enabling the routine, scheduled access to space. Unfortunately, while a great improvement over current systems, the cost per pound delivered to orbit for currently proposed systems will still be greater than that needed to exploit space for many business uses. One of the limiting factors in potential cost reductions for chemical rockets is the I_{sp} limit.

The use of airbreathing engines holds potential for very significant increases in I_{sp} which could result in a significantly lower cost per pound to orbit. The National Aero-Space Plane Program (NASP), which was canceled in 1995 as unaffordable at that time, was a joint NASA/U.S. Air Force effort to develop a single-stage-to-orbit, airbreathing vehicle. However, while the NASP was never completed, the NASP program developed a significant number of technologies which only await demonstration before they will begin to be accepted for use in future aerospace vehicles. Key among these technologies are airbreathing engines for hypersonic flight. NASP brought the materials and design methods for scramjet (supersonic combustion ramjet) engines to the point that efficient engines and practical vehicles which use them can be developed. One of the major requirements to have these technologies accepted is a flight demonstration. In the spirit of "Faster, Better, Cheaper" NASA has initiated the Hyper-X Program to demonstrate that scramjet engines can be designed, constructed, and will operate at the high I_{sp} levels necessary for use in access to space vehicles as an initial step to this end.

The NASA Hyper-X Program employs a low cost approach to design, build, and flight test a series of small, airframe-integrated scramjet powered research vehicles at Mach numbers of 5, 7, and 10. The research vehicles will be dropped from the NASA Dryden B-52, rocket boosted to test point by a Pegasus first stage motor, separated from the booster, and then the scramjet powered vehicle operated in autonomous flight. The Hyper-X Program includes extensive CFD analyses and validation, design method verification, and ground testing (to include tests of the actual flight vehicles for Mach numbers of 5 and 7 in the Langley 8-Foot High Temperature Tunnel). This paper will describe the Hyper-X Program and will report on the progress toward construction of the first flight vehicle.

1. Director, Aerospace Transportation Technology Office, NASA Langley Research Center
2. Hyper-X Stage Separation Manager, NASA Langley Research Center
3. Hyper-X Technology Manager, NASA Langley Research Center
4. Hyper-X Program Manager, NASA Langley Research Center
5. Hyper-X Flight Project Manager, NASA Dryden Flight Research Center.

Symbols and Abbreviations

AETB	Alumina Enhanced Thermal Barrier
AIL	Aircraft In the Loop
ALFE	Air Launched Flight Experiment
AOA	Angle Of Attack
CST	Combined Systems Tests
DCM	Direct Connect Module
de	elevator deflection
DFRC	Dryden Flight Research Center
DFX	Dual-Fuel eXperimental
EAFB	Edwards Air Force Base
EMI	ElectroMagnetic Interference
FCGNU	Flight Control, Guidance, and Navigation Unit
FMS	Force Measurement System
fps	feet per second
FTS	Flight Termination System
GASP	General Aerodynamic Simulation Program
GVT	Ground Vibration Tests
HRE	Hypersonic Research Engine
HXLV	Hyper-X Launch Vehicle
HXRV	Hyper-X Research Vehicle
HyFlitE	Hypersonic Flight Experiment
HySTP	Hypersonic Systems Technology Program
INU	Inertial Navigation Unit
I_{sp}	Specific Impulse
LaRC	Langley Research Center
M	Mach number
MDA	McDonnell Douglas Aerospace
NASP	National AeroSpace Plane
NM	Nautical Miles
PCM	Pulse Code Modulated
PID	Performance Identification
psf	pounds per square foot
q	dynamic pressure
TPS	Thermal Protection System
TSP	Temperature, Strain, and Pressure
VAFB	Vandenberg Air Force Base
WTR	Western Test Range
8' HTT	8 Foot High Temperature Tunnel

Background

Hypersonic airbreathing propulsion has been studied by NASA for nearly 60 years. Numerous scramjet tests have been performed in a number of ground facilities e.g., refs. 1-5. However, these tests have limitations. For example, all ground test facilities have contamination when compared with flight in the atmosphere. This contamination affects combustion (ignition, flameholding and combustion contribution to engine thrust), boundary layer formation and fuel mixing characteristics. In addition, facility size generally limits the experiment scale, resulting in subscale or partial simulation of the scramjet flowpath. For example, no test has been performed on a complete airframe integrated scramjet. Another limitation is in data measured. Scramjet tests to date focus on engine thrust, component efficiencies, and combustion efficiency. Little if any effort is expended, for example, on quantification of lift and/or pitching moment contributions from the engine thrust angle or from the asymmetric nozzles used in this type of application. These measurements, and validation of the prediction of these effects will be important for any flight application of scramjet propulsion. Only through flight tests can these limitations be removed and the promise of scramjets verified.

In the United States, scramjet engines have almost reached flight on two occasions. The Hypersonic Research Engine (HRE) project of the 1960's was focused on flying an axisymmetric scramjet mounted on the X-15 (fig. 1), but the X-15 project was canceled before flight of an operating HRE could take place. The NASP and follow-on HySTP programs of the 1980's and 1990's came close to flying an airframe integrated scramjet. After the demise of NASP and HySTP NASA management, understanding the significant potential of airbreathing hypersonic engines for both access to space and rapid endoatmospheric flight, realized that it would not be wise to allow the advances made by NASP to be lost and hypersonic technology development enter into another hiatus of 15 years like that at the end of the HRE program. As a result, a series of small contracts were issued to examine realistic vehicles which could be constructed using the NASP technology base, to determine the minimum size flight research vehicle (size is a major cost driver), and to develop a flight test approach to demonstrate the NASP technology, in particular, the viability of scramjet engines in flight. These studies indicated that a 10-12 foot vehicle could be "smart scaled" from a 200-foot operational concept and still demonstrate scramjet powered acceleration. In addition, evaluation of operability limits indicated that the scramjet would be operating far enough from flameholding and ignition limits so that hydrogen-fueled operation could be achieved. The 12-foot size (with a wing span of about 5 feet) (fig. 2) was ultimately selected over a 10 foot vehicle because of small performance gains with minimal effect on overall program cost (the increased size did not affect booster selection). The conceptual design for the Hyper-X was performed between February and May, 1995, by McDonnell Douglas Aerospace (MDA) under contract to NASA (ref. 6). Shortly thereafter, at the urging of the NASA Administrator, the Office of Aeronautics and Space Transportation Technology in NASA Headquarters held an internal agency competition for proposals which would utilize flight testing to make significant aeronautical advances (ref. 7). Utilizing the results of the studies the NASA Langley Research Center entered the competition with its scramjet flight demonstration selected as one of the two proposals to be funded (fig. 3). To save time after winning the competition NASA Langley made use of the Dual-Fuel Airbreathing Hypersonic Vehicle Design Study (ref. 8) to develop the preliminary design of the vehicle. This effort was completed between March and October, 1996 under contract to MDA. The Hyper-X research vehicle is essentially photographically scaled from these previously studied concepts. This allowed utilization of existing data bases, as well as rapidly converging to a controllable flight test vehicle with low trim drag penalty. The scramjet flowpath, on the other hand, was re-optimized for engine operability and vehicle acceleration, accounting for scale, wall temperature effects, etc. For example, the inlet contraction, fuel injector details and combustor length have been modified, rather than simply photographically scaled. At the conclusion of the preliminary design a competition was held for a contractor

Figure 1. X-15 with HRE

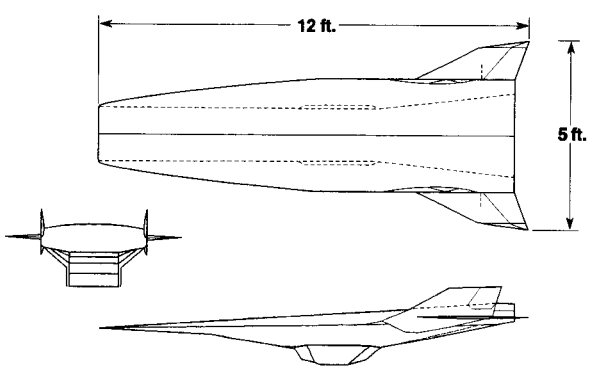

Figure 2. Hyper-X Research Vehicle Configuration

Goal: Demonstrate advanced, airframe-integrated, airbreathing hypersonic propulsion system and other key enabling technologies in flight

Value:
- Significantly advances the state-of-the-art
- Acquires crucial data, unavailable in ground tests
- Validates key technologies and design methods that enable airbreathing aerospace planes for hypersonic cruise and space access

Approach: Two-phase, flight-focused program
- Phase 1: airframe-integrated, dual-mode scramjet
  - Four 12-foot, uncrewed, expendable test vehicles
  - Fly at Mach 5, 7, 10, 10
- Phase 2 builds on Phase 1 results: a larger-scale, reusable X-plane (not a funded program)
  - Airframe-integrated combined-cycle propulsion
  - Flight envelope expansion from takeoff through hypersonic speeds

Figure 3. Hyper-X Program

to develop the final design and subsequently fabricate the Hyper-X research vehicle. This competition was won by a team led by Micro Craft of Tullahoma, Tennessee including Boeing - North American of Seal Beach, California, GASL of Ronkonkoma, New York, and Accurate Automation of Chattanooga, Tennessee. The team was awarded a contract for Hyper-X design and fabrication in March, 1997. At about the same time Orbital Sciences of Chandler, Arizona was awarded the contract for the Hyper-X launch vehicle which will be a modified version of Orbital's Pegasus launch vehicle. (See fig. 4 for timeline.)

Program Goals and Approach

The goal of the Hyper-X Program is to demonstrate and validate the technology, the experimental techniques, and computational methods and tools for design and performance predictions of hypersonic aircraft with an airframe-integrated, dual-mode scramjet propulsion system. Accomplishing this goal requires flight demonstration of a hydrogen-fueled, dual-mode scramjet powered, hypersonic aircraft.

The technology portion of the program concentrates on three main goals:

1) risk reduction — i.e., preflight analytical and experimental verification of the predicted performance and operability of the Hyper-X flight vehicle,
2) flight validation of design predictions, and
3) continued development of the advanced tools required to improve scramjet powered vehicle designs.

This activity includes analytical and numerical methods applied to design the scramjet engine, wind tunnel verification of the engine, vehicle aerodynamic and thermal data base development, thermal-structural design, boundary layer analysis and control, flight control law development and flight simulation models.

The flight test part of the Hyper-X Program focuses directly on the advancement of key technology readiness levels, elevating them from the laboratory level to the flight environment level required before proceeding with a larger, crewed X-plane or prototype program. In addition, the flight test portion must advance many flight test techniques.

Rather than starting the flight vehicle design on a clean sheet of paper, the program used the extensive National Aero-Space Plane (NASP) data base, and follow-on hypersonic mission study programs (ref. 8). Also, to meet budget and schedule, the flight research vehicle is based on existing design data bases, and off-the-shelf materials and components wherever possible. For example, the copper alloy engine materials and fabrication methods are similar to those used for many experimental wind-tunnel programs, rather than the flight weight actively-cooled material systems that will be required for operational hypersonic aircraft. So in summary, the Hyper-X program is aimed directly at demonstrating and flight-validating airframe-integrated scramjet-powered vehicle performance while concurrently continuing the development of design methods and experimental tools for future vehicle development.

Flight Test Program

The flight test portion of the Hyper-X Program consists of four flights. The first, currently scheduled for mid-1999, will be to Mach 7. The second to Mach 5 and two subsequent flights to Mach 10 will follow on an approximately yearly basis (fig. 5). The first

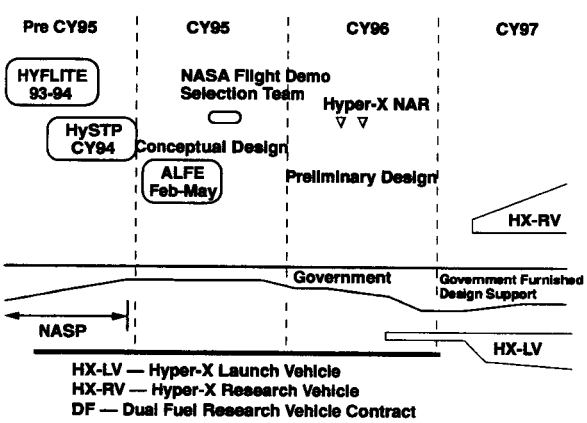

Figure 4. Timeline leading to Hyper-X Program

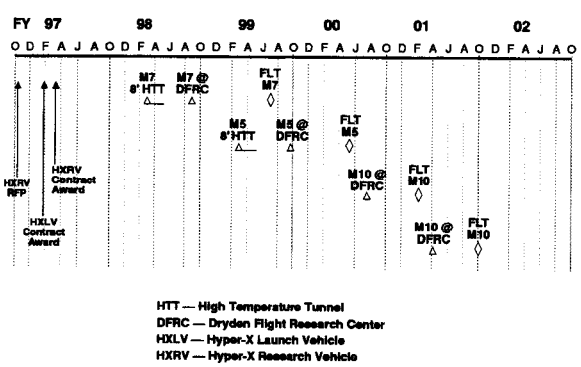

Figure 5. Hyper-X Program Schedule

flight is to Mach 7 because that flight will actually be less difficult than Mach 5. At Mach 7 the engine will be in full scramjet operation and the desired flight test conditions and Pegasus booster are relatively evenly matched. At Mach 5 the engine will be in the transition from ramjet operation to scramjet operation which is a more difficult design problem and the Pegasus booster will most likely require a propellant off-load to achieve the desired test conditions. The Mach 10 flights (one cruise flight and one acceleration flight) will be last because Mach 10 imposes much higher loads (heating, etc.) on the vehicle than the other flights and the Pegasus booster must approach its performance limits to achieve the desired test points. It is also desirable to utilize the results from the Mach 7 and 5 flights to help optimize the vehicle for these difficult conditions.

All flights will be conducted from NASA Dryden Flight Research Center (DFRC) at Edwards, California. The Hyper-X research vehicle/launch vehicle stack will be mounted under the wing of the DFRC B-52, carried off the California coast to launch altitude (fig. 6) and released. Nominal flight sequence for the Mach 7 flight test is illustrated in figure 7. Following drop from the B-52 and boost to a predetermined stage separation point, the research vehicle will be ejected from the booster-stack and start the programmed flight test. Once separated from the booster, the research vehicle will establish unpowered controlled flight. The autonomous flight controller will also determine the true flight conditions, which are required to correctly program the fuel system. Following the powered engine test and 15 seconds of aerodynamic parameter identification maneuvers (refs. 9 and 10) the cowl door will be closed. The vehicle will then fly a controlled deceleration trajectory to low subsonic speed. During descent, the vehicle control system will initiate S-turn maneuvers to dissipate vehicle energy. In the process, short-duration programmed test inputs will be superimposed on the control surface motions to aid in the identification of aerodynamic parameters. Fully autonomous, these vehicles will fly preprogrammed 400-mile routes in the Western Test Range (WTR). Air Force Vandenberg, and Navy Point Magu assets will be used for data downlinking and tracking. The first flight will be aimed due West to avoid disruption of commercial flight corridors and any possible damage or injury should the vehicle go out of control. If the first flight is entirely successful the Mach 5 flight may be aimed down the coast to achieve a possible landing at Navy facilities on San Nicholas Island (fig. 8).

The desired test condition for the Hyper-X in free flight is a dynamic pressure of 1000 pounds per square foot. For the Mach 10 tests, launch from the B-52 will take place at 40,000 feet. For the lower-speed tests, however, booster launch at lower altitudes will restrain the HXLV from over-accelerating the Hyper-X. For this same reason, in fact, the booster assembly will also incorporate up to 5 tons of ballast. For the Mach 5 test, the HXLV may even fly with a reduced propellant load. The research vehicle will be boosted to approximately 85,000 feet for tests at Mach 5, 100,000 feet for tests at Mach 7, and 110,000 feet for tests at Mach 10.

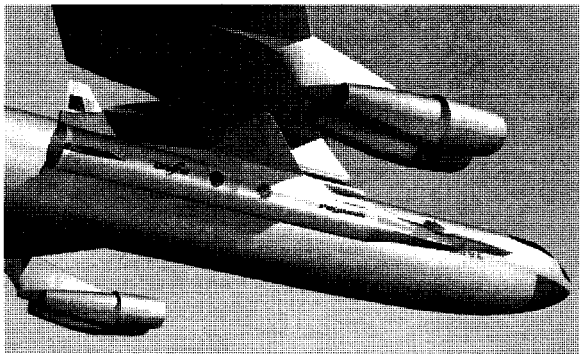

Figure 6. Hyper-X Stack Mounted on B-52

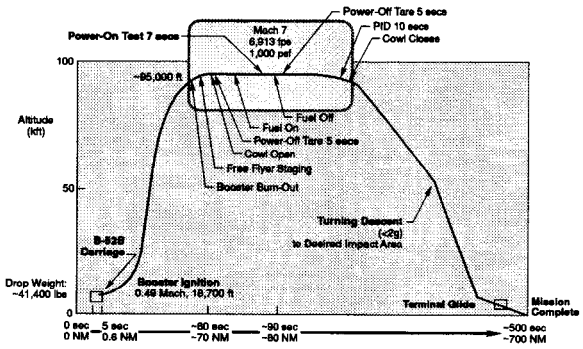

Figure 7. Hyper-X Nominal Trajectory

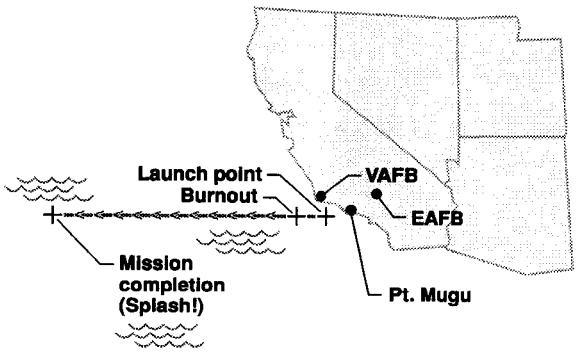

Figure 8. Hyper-X Range

Vehicle Development

An industry team led by Micro Craft, Inc., of Tullahoma, Tennessee, has been selected to design and fabricate the hypersonic vehicles. Micro Craft will build the vehicles and provide overall program management. GASL Inc., of Ronkonkoma, New York, is the scramjet and fuel system detail designer and builder. Boeing North American of Seal Beach, California, is providing vehicle aero/thermal/structural design and analysis, TPS design and fabrication, and guidance, navigation, and control software and simulations. Accurate Automation Corp. of Chattanooga, Tennessee, is responsible for instrumentation. On a separate contract, the Chandler, Arizona, Launch Systems Group of Orbital Sciences Corporation will build the Hyper-X launch vehicles—a first stage derivative of their Pegasus launch system—that will boost the Hyper-X vehicles to the test conditions. In addition, Orbital has major responsibilities for integration with the flight test vehicle and flight test support.

Both contractors have completed Manufacturing Readiness Reviews and are in the process of purchasing material and components, and starting manufacturing. A program schedule, presented as figure 4, shows that the Mach 7 vehicle will be delivered in March 1998. Subsequent vehicles will be delivered in yearly cycles. The first flight test is scheduled for July 1999.

The vehicle structural design and preliminary systems layout are presented in figures 9 and 10. The vehicle structure utilizes metallic (largely aluminum) keels, bulkheads and skins, all sized to meet vehicle stiffness requirements. Thermal protection consists of alumina-enhanced thermal barrier (AETB) tiles, which have been fully characterized for the space shuttle, carbon-carbon wing, tail and forebody nose leading edges. The majority of the wings and tails are high temperature steel. High pressure gaseous hydrogen (fuel), silane (scramjet ignition) and helium (fuel system and internal cavity purge) are contained in off-the-shelf fiber wound aluminum tanks. Instrumentation, flight and engine cowl control actuators and controllers, and the flight control computer are all either off-the-shelf or derivatives of existing units. A high pressure water system is included for engine cowl cooling for the Mach 7 and 10 flights.

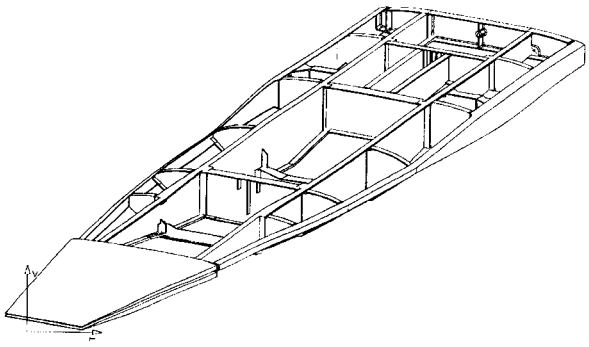

Figure 9. Hyper-X Structure, TPS, and Systems

Measurements and instrumentation requirements for the Hyper-X flight test vehicle were established by a team composed of hypersonic technology "customers" and flight test personnel. The former are primarily interested in determination of propulsion and vehicle performance and obtaining local measurements for validation of design methods (propulsion, aerodynamic, thermal, structures and controls), whereas the latter are more concerned with monitoring vehicle systems for safety and understanding how the vehicle performs, or identifying failure modes. The program intentionally utilizes proven, reliable instrumentation methods, and a relatively small number of simple (pressure, temperature and strain gage) measurements to assure program schedule and cost goals. Off-the-shelf data system components are utilized to process and telemeter measurements. A schematic of the data system is presented in figure 11. Location/function of

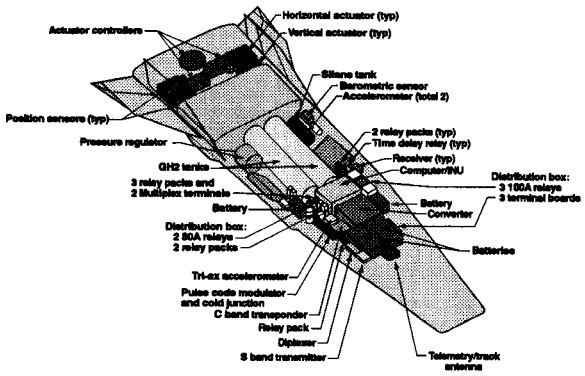

Figure 10. Hyper-X Equipment Layout

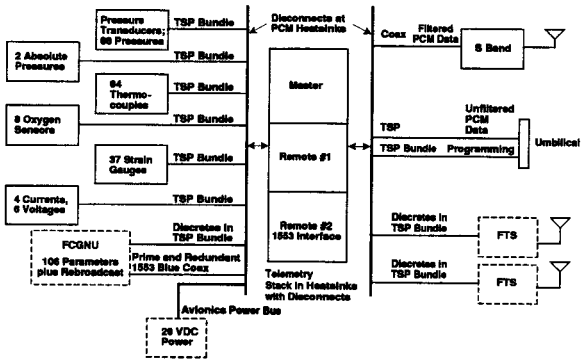

Figure 11. Hyper-X Instrumentation System

the measurements can be summarized as follows:

Airframe - surface	64
Engine surface	63
Airframe structure	55
Fuel system	32
Control surfaces	10
Coolant/purge	17
O2 /fire detection	24
Inertial and time	17
Attitude	8
Voltage/current	8
Miscellaneous	65

Of the 371 measurements, 115 are pressure, 96 are temperatures and 37 are strain gauge. The program is also carrying 40 percent spares for growth potential.

Ground Tests of Vehicle

After delivery, each vehicle will undergo extensive testing. In addition to normal validation and verification testing before flight, and integration and stage separation tests, the Mach 7 and 5 vehicles will be tested at flight conditions (Mach, pressure and enthalpy) in the Langley Research Center 8-Foot High-Temperature Wind Tunnel (8' HTT, see figure 12). The objective of these tests is to provide propulsive system verification, validate structural integrity, and verify operation of various components. This test provides flight test risk reduction and will allow comparison of the wind tunnel methods and results with flight performance. The resulting data will be directly compared with the in-flight measurements, but more important, with prediction for the wind tunnel and flight environments.

Each vehicle is being designed for insertion into the tunnel flow for a 30-second period, during which its scramjet can be operated. For safety, the gaseous hydrogen fuel will be supplied from outside the tunnel rather than from the vehicle's on-board fuel system. In addition, data will be transferred using an umbilical hook-up rather than telemetry. In all other respects the tested systems will be operated as they would be operated in flight. Specifications call for each vehicle to be capable of withstanding at least 10 thermal cycles in the tunnel. This test also constitutes part of the preflight verification and validation testing checkout.

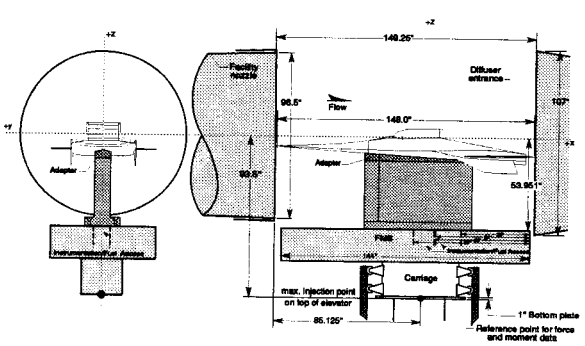

Figure 12. Hyper-X Installed in Langley 8-ft. High Temperature Tunnel

Each vehicle, in the interim between the 8' HTT tunnel tests and flight test, will undergo a variety of component and system preflight tests; first without the HXLV (6 months), then with the HXLV (1 month), and finally mated to the B-52 (2 months). These tests include aircraft-in-the-loop (AIL) vehicle integration, on/off conditions, and integrated engine system tests, HXRV-HXLV integration, electromagnetic interference (EMI) and combined systems tests. Following B-52 mating, additional tests will include ground vibration tests (GVT), EMI, combined systems (CST) and taxi tests.

Vehicle Design Validation

Validation of the Hyper-X predicted performance will be considered as validation of the design process, and designs generated using these methods. Figure 13 illustrates results from the highest level tools used for design. This Reynolds Average Navier Stokes solution, produced using the GASP code (ref. 11), provides a complete solution of the flowfield of the flight vehicle at the powered test condition, and was used to verify the performance predicted using normal design tools (ref. 12).

Wind tunnel testing commenced in early 1996 to verify the engine design, develop/demonstrate flight test

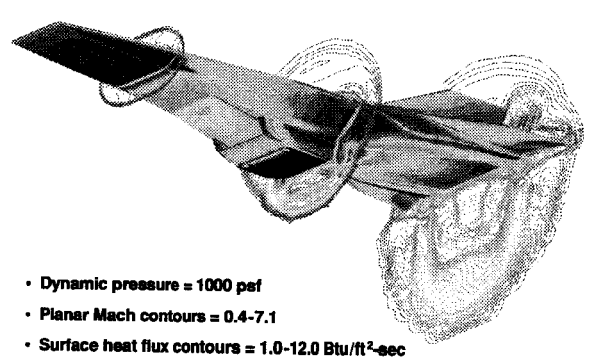

Figure 13. CFD Solution for Powered Hyper-X at Mach 7

engine controls, develop experimental aero-dynamic data bases for control law and trajectory development and support the flight research activities. Mach 7 engine performance and operability was verified in reduced dynamic pressure tests of the "DFX" (dual-fuel experimental) engine in the NASA Langley Arc Heated Scramjet Test Facility (ref. 1). Figure 14 illustrates the extent of the full-scale, partial-width flowpath simulated in those tests. The shaded region represents the DFX engine. Preliminary experimental results for the Mach 5 and 10 scramjet combustor design have been obtained using the direct connect combustor module rig (DCM) and HYPULSE facility in the reflected shock mode (ref. 13). Additional tests will be performed at Mach 7, 5 and 10 using a partial width, full scale engine segment, which incorporates all variable geometry and cooling features of the Hyper-X flight engine. These tests will include full dynamic pressure and enthalpy, and flight controls and/or flight control simulation.

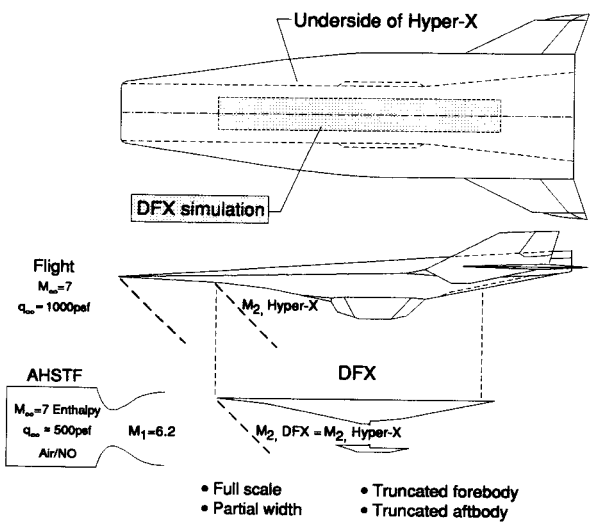

Figure 14. DFX Model Compared with Hyper-X

A preliminary aerodynamic data base was developed from results of 15 experimental programs on 11 separate wind-tunnel models utilizing over 1,000 wind-tunnel runs. These tests were performed using 8.33% and 3.0% scale model tests of the Hyper-X research vehicle (HXRV) and the Hyper-X launch vehicle (HXLV) booster stack models respectively at Mach numbers of 0.8-4.6, 6 and 10. The aerodynamic data base includes boost, stage separation, research vehicle powered flight and unpowered flight back to subsonic speeds. The aerodynamic and propulsion data base is being filled in with additional wind tunnel tests. Figures 15 and 16 illustrate an 8.33 percent scale Hyper-X research vehicle model and a 3 percent booster stack model respectively, both in the NASA LaRC 20- Inch Mach 6 tunnel at Langley.

Other work leading up to Hyper-X vehicle development contract award included control law development, preliminary trajectory evaluations (including some Monte Carlo uncertainty analysis, using the methods demonstrated in ref. 14) and aerothermal loads for the boost, separation, and flight test portion of the flight. Preliminary control laws (ref. 15) were developed for feasibility studies. For the powered part of the trajectory, longitudinal and lateral control laws were developed for angle-of-attack (AOA) and side-slip control. These include angle-of-attack and side-slip estimators which utilize motion data, aerodynamic data and atmospheric and flight condition data. Preliminary assessments of flight trajectories and stability margins for the longitudinal control laws, using conservative structural bending mode filters, demonstrate that the vehicle meets the flight test requirements. For example, figure 17 presents elevator position and angle-of-attack as a function of time, from stage separation through cowl closure. Initially the elevator controls are locked, and the vehicle is assumed to be at the launch vehicle stage separation condition of zero degrees AOA. Aerodynamic and sep-

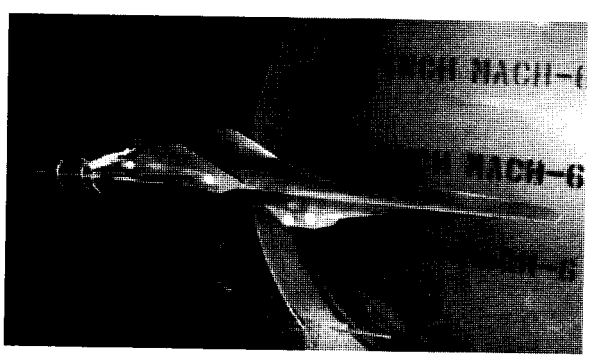

Figure 15. Hyper-X 8.33% Aerodynamic Model Installed in Langley 20" Mach 6 Tunnel

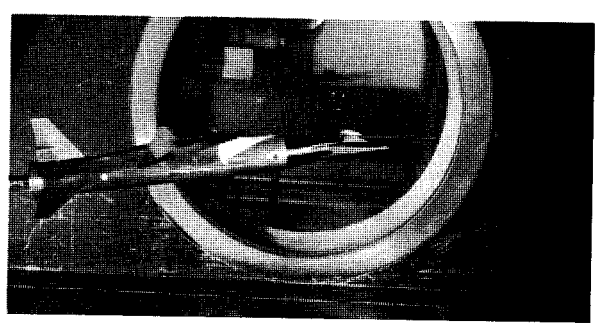

Figure 16. Hyper-X 3% Aerodynamic Model of Booster Stack Installed in Langley 20" Mach 6 Tunnel

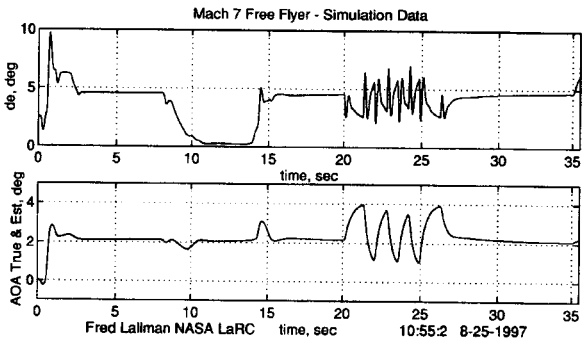

Figure 17. Hyper-X Flight Control Evaluation (Rudder and Angle-0f-Attack History)

aration forces drive the vehicle nose down initially, toward negative AOA. When active control is established the control system pulls the elevator (wing) up to regain zero degrees AOA. At 0.5 seconds from separation the flight controls switch to the powered flight attitude, which is 2 degrees AOA. For this simulation the cowl door opens between 2-2.5 seconds. Tare, no fuel operation, is maintained for 5 seconds. At 8 seconds after separation, ignitor (silane) and fuel flow are initiated. The ignitor is turned off at about 9.5 seconds, as the fuel is ramped up to full power. Full power, design fuel flow rate, is maintained from about 11 to 14 seconds in this simulation. The fuel ramp down and blowout is complete at 14.5 and 14 seconds respectively. Five seconds of engine tare data, and 15 seconds of performance identification maneuvers (PIDs) are performed before the cowl flap is closed 35 seconds after stage separation. During this process the elevator excursions are within reasonable limits, and vehicle response is adequate for the flight test. Preliminary analysis indicate that stability margins for the research are within acceptable margins.

Summary

This paper discussed highlights of NASA's hypersonic technology program, Hyper-X, designed to elevate scramjet powered hypersonic flight technology from the wind tunnel to the real flight environment, a mandatory step for preceding to future vehicle applications. Design performance of the Mach 7 Hyper-X research vehicle has been confirmed by results from experimental wind tunnel tests. These experimental wind tunnel tests verified both the performance and operability of the scramjet engine, provided aerodynamic data bases required for the boost, stage separation as well as powered and unpowered flight of the research vehicle. Scaling of these results to flight conditions confirmed that the 12 foot vehicle will accelerate by scramjet power. Flight test plans call for the first Hyper-X research vehicle to fly at Mach 7 in 1999. These tests are an integral part of, but not the entire program. Experimental results from these flight tests will be used to verify design methods, and provide direct comparisons with ground based wind tunnel tests. In addition, ground based experimental methods and design methods are continuing to be improved, and design studies for follow-on programs are continuing.

Acknowledgments

The authors would like to acknowledge Steven T. Corneliussen, for literary support in the Aerospace America article (ref. 7), some of which was utilized herein, Randy Voland for support in scramjet propulsion, Scott Holland for support in aerodynamic testing, Walt Engelund, for support in aero data base development, and Fred Lallman, for control law developments.

References

1. Guy, R.W., Rogers, R.C, Puster, R.L., Rock, K.E., and Diskin, G.S.: The NASA Langley Scramjet Test Complex, 32nd AIAA/ASME/SAE/ASEE Joint Propulsion Conference, July 1-3, 1996, Lake Buena Vista, FL.
2. Andrews, E.H.; and Mackley, E.A.: NASA's Hypersonic Research Engine Project - A Review. NASA TM 107759, Oct. 1994.
3. Anderson, G.Y., Bencze, D.P. and Sanders, B.W.: "Ground tests confirm the promise of hypersonic propulsion" Aerospace America V25 No. 9, pp 38-42, Sept. 1987.
4. Guy, R.W.; and Mackley, E.A.: Initial wind tunnel tests at Mach 4 and 7 of a hydrogen-burning, air-frame-integrated scramjet AIAA paper 79-8045 presented at 4th International Symposium on Air Breathing Engines, April 1-6, 1979.
5. Stalker, R. J., Simmons, A. P., Mee, D. J.: Measurement of Scramjet Thrust in Shock Tunnels. 18th AIAA Aerospace Ground Testing Conference. AIAA 94-2516, June 1994, Colorado Springs, Co.
6. Air Launched Flight Experiment Final Report, McDonnell Douglas Aerospace, June 1995.
7. Rausch, Vincent L.; McClinton, Charles R.; and Hicks, John W.: NASA Scramjet Flights to Breath New Life into Hypersonics, Aerospace America, July 1997.
8. Bogar, T.J.; Alberico, J.F; Johnson, D.B; Espinosa, A.M. and Lockwood, M.K.: Dual-Fuel

Lifting Body Configuration Development. AIAA 96-4592, Norfolk, Va., Nov. 1996.
9. Iiff, K.W. and Shafer, M.F.: Extraction of stability and control derivatives from orbiter flight data. NASA CP 3248, April 1995.
10. Morelli, E.A.: Flight test validation of optimal input design and comparison to conventional inputs. AIAA 97-3711, AIAA Atmospheric Flight Mechanics Conference, Aug. 11-13, 1997. New Orleans, LA.
11. McGrory, W. D.; Huebner, L. D.; Slack, D. C.; and Walters, R. W.: Development and Application of GASP 2.0. AIAA Paper 92-5067, Dec. 1992.
12. Hunt, James L. and McClinton, Charles R.: Scramjet Engine/Airframe Integration Methodology. AGARD Conference, Palaiseau, France, April 14-16, 1997.
13. Bakos, R.J.; Castrogiovanni, J.F.; Calleja, J.F.; Nucci, L. and Erdos, J.I.: Expansion of the Scramjet Ground Test Envelope of the HYPULSE Facility. AIAA 96-45006, AIAA 7th International Space Planes and Hypersonic Systems and Technology Conference, Norfolk, VA, Nov. 1996.
14. Desai, P.N.; Braun, R.D.; Powell, R.W.; Engelund, W.C.; and Tartabini, P.V.: Six degree-of-freedom entry dispersion analysis for METEOR recovery analysis. Journal of Spacecraft and Rockets, Vol. 34 No. 3, pp. 334-340, May-June 97.
15. Lallman, F.: Hyper-X Government Furnished Items (NAS1-97110), Deliverable H7006-M7-01-GCT, March 24, 1997, NASA Report HXGFI-001.